[illegible]－[illegible]

[illegible]

[illegible]

● [illegible]

[illegible]

[illegible]

● [illegible]

[illegible] (AC)	[illegible]
[illegible] ([illegible])	[illegible]

[illegible]

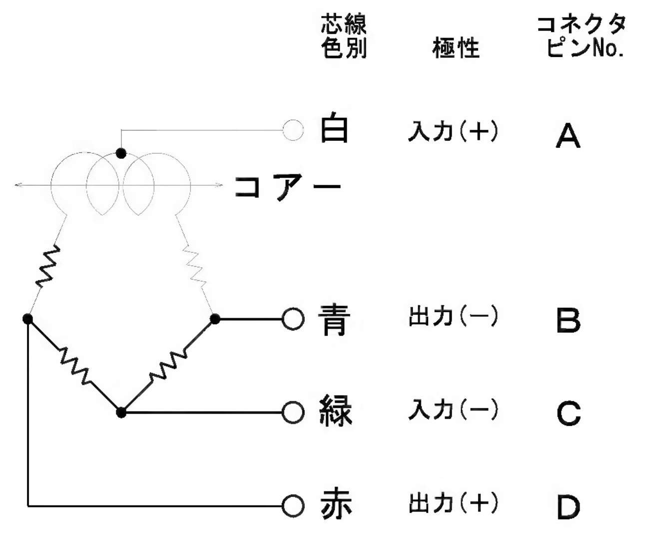

芯線 色別
極性
コネクタ ピンNo.
白
入力(+)
A
コアー
青
出力(−)
B
緑
入力(−)
C
赤
出力(+)
D

[illegible]－[illegible]

● [illegible]

[illegible]－[illegible]－[illegible]

[illegible] φ3.5 [illegible] ([illegible] ※ [illegible])

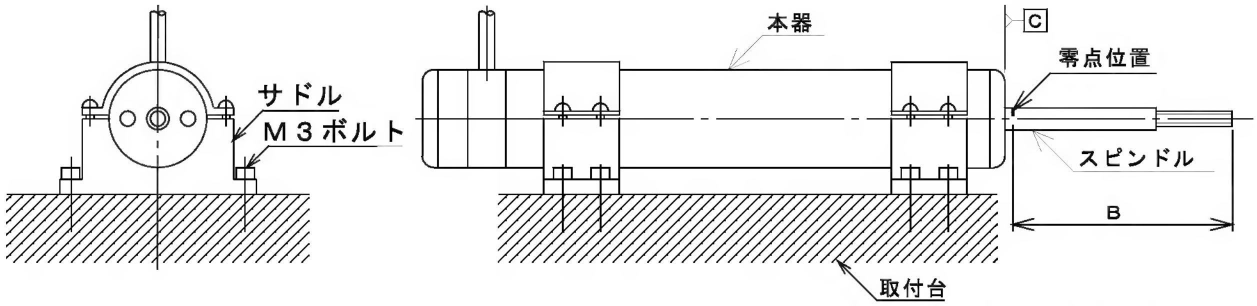

サドル
M3ボルト
本器
C
零点位置
スピンドル
B
取付台

[illegible]

[illegible]

[illegible]

①[illegible]

② [illegible]

③ [illegible]

④ [illegible]

⑤ [illegible]

([illegible])

[illegible]	[illegible]
TCL- 5L	60
TCL- 10L	60
TCL- 20L	70
TCL- 50L	100
TCL-100L	150

[illegible]

※[illegible]. [illegible]

● [illegible]

[illegible]. [illegible]

[illegible]. [illegible] — [illegible] — [illegible]

[illegible]. [illegible]

[illegible]. [illegible]

[illegible] ℃ [illegible]

● [illegible]

[illegible]

● [illegible]

[illegible] ([illegible]) [illegible]

[illegible] ([illegible]) [illegible]

●□□□

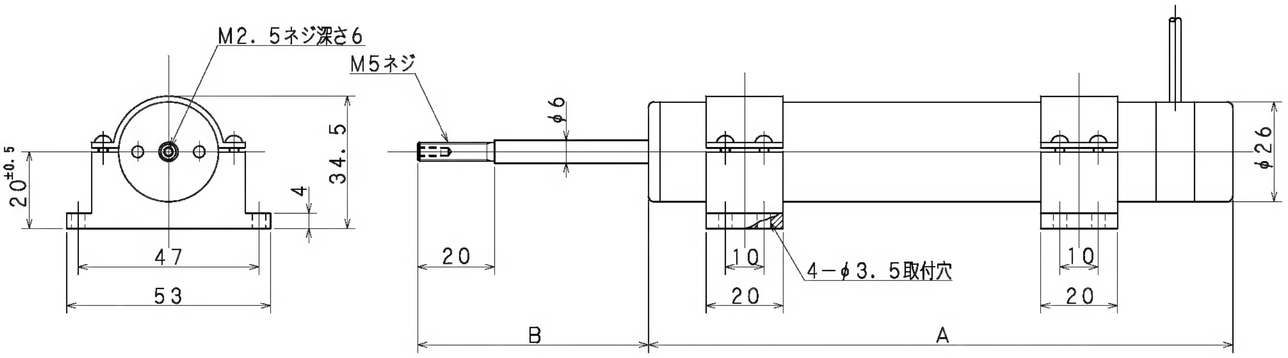

□□□□□□□

●□□□□□□□□□□

□□□	□□□□	□	□
TCL-　5L	±　5mm	152	60
TCL-　10L	±　10mm	172	60
TCL-　20L	±　20mm	232	70
TCL-　50L	±　50mm	352	100
TCL-100L	±100mm	572	150

REV2003

[illegible]

[illegible]	[illegible]−[illegible]
[illegible]	±[illegible] [illegible] ±[illegible]
[illegible]	[illegible] [illegible]
[illegible]	[illegible]
[illegible]	[illegible]
[illegible]	[illegible]
[illegible]	[illegible]
[illegible]	[illegible]Ω
[illegible]	[illegible]Ω
[illegible]	[illegible] [illegible] [illegible]℃
[illegible]	[illegible] [illegible] [illegible]℃
[illegible]	[illegible]℃
[illegible]	φ[illegible]
[illegible]	[illegible]−[illegible]−[illegible]
[illegible]	

[illegible]

[illegible] 121-0812 [illegible]1-17-16 TEL 03-3850-5431 FAX 03-3850-5436

[illegible] 121-0064 [illegible]5-24-27 TEL 03-3858-3241 FAX 03-3859-1240

[illegible] 550-0006 [illegible]1-5-16[illegible] TEL 06-448-3412 FAX 06-448-0875

[illegible] 485-0802 [illegible]3-69 TEL 0568-79-3509 FAX 0568-79-6501